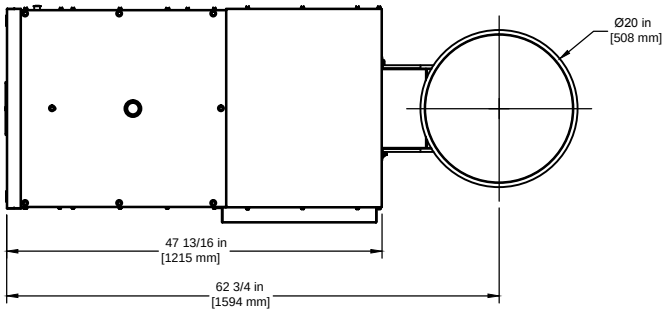

TOP VIEW

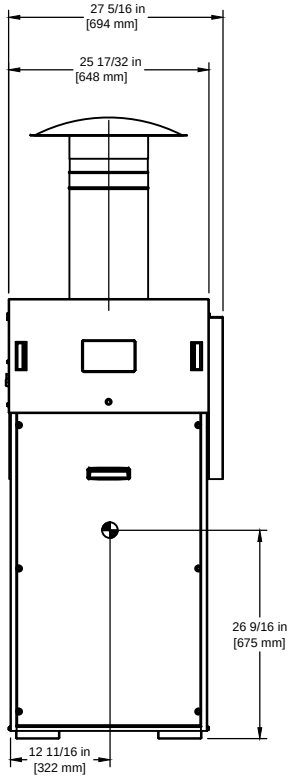

FRONT VIEW

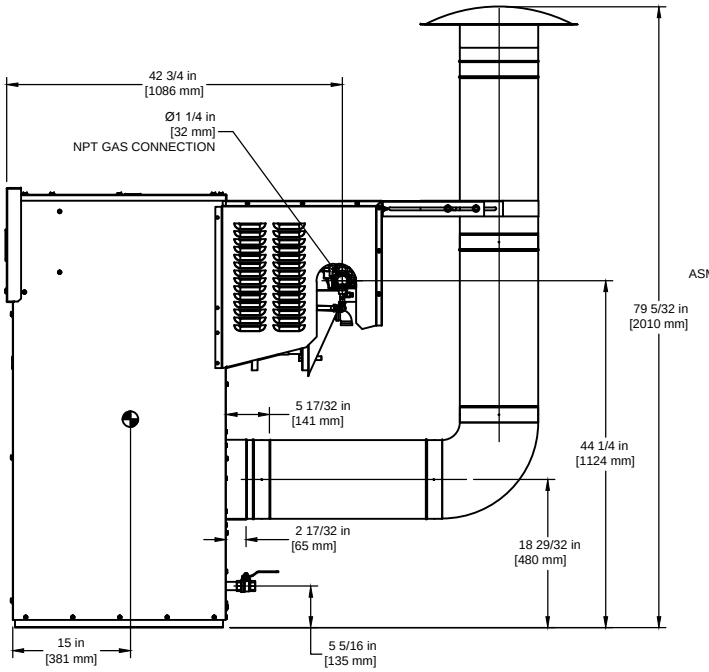

SIDE VIEW

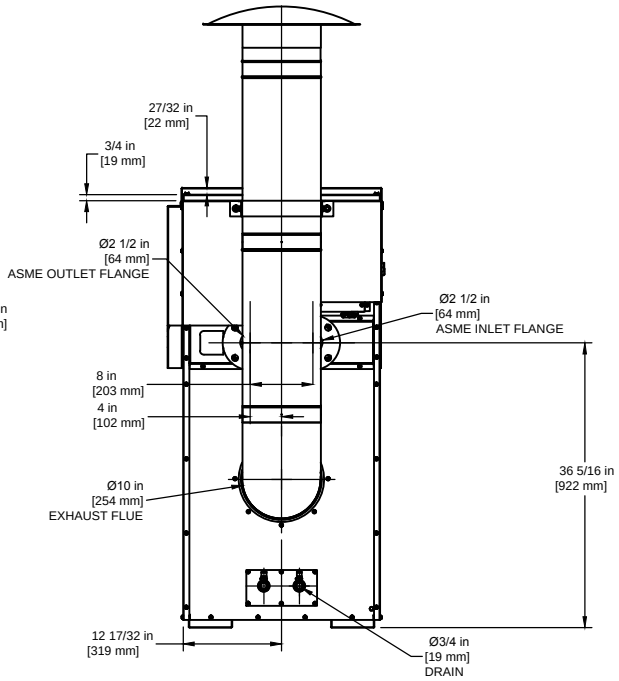

BACK VIEW

NOTE: DIMENSIONS ARE SUBJECT TO CHANGE WITHOUT NOTICE